F012 198 641

Stand Issue } 98-08-27

Fig./Abb. 1

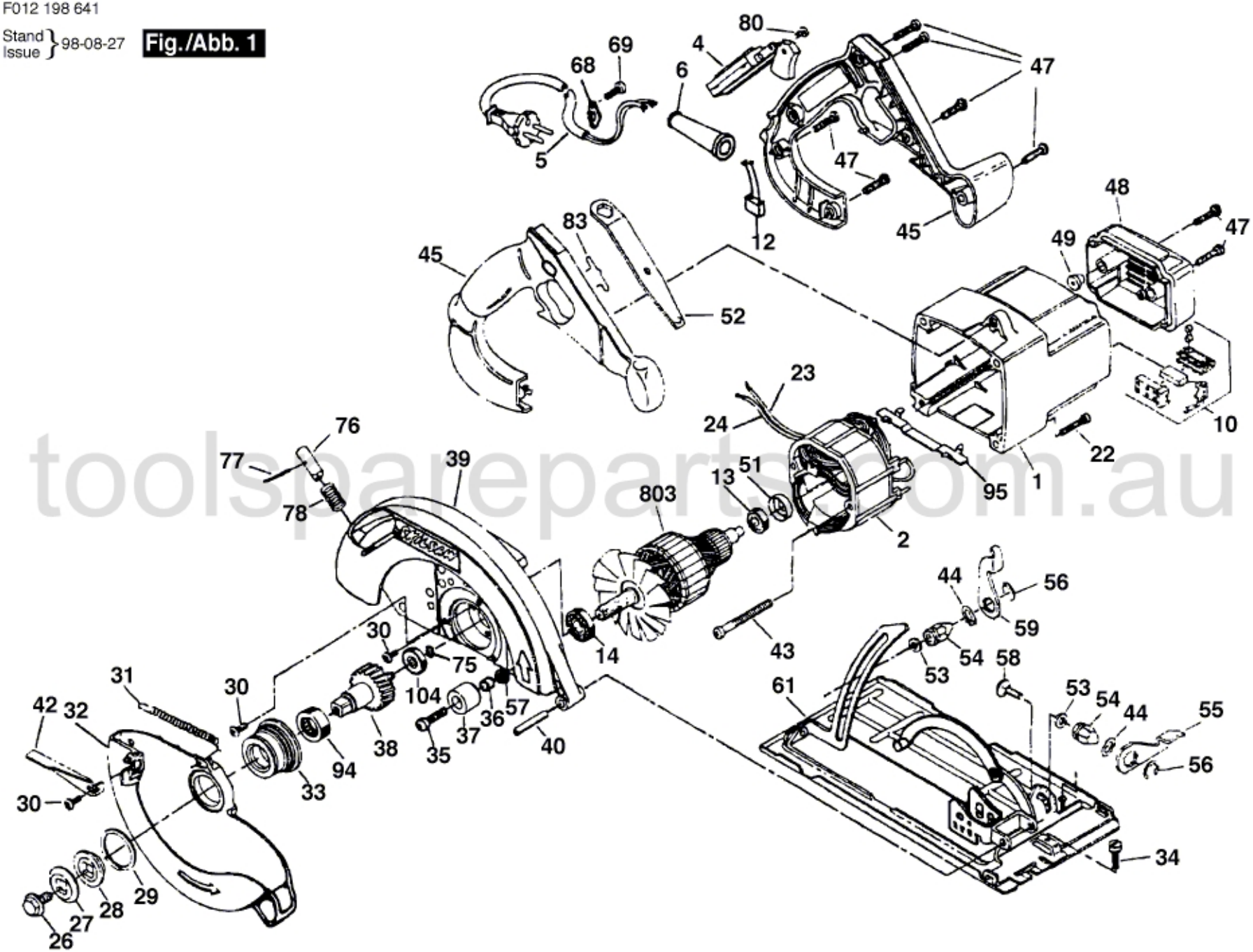

toolsspareparts.com.au